GESS XTREME™

Product Technical Specifications

CCTV SECURITY CAMERA

SKU #

GESSX-IP730LPMVR-W9

GESS®
TECHNOLOGIES

GESSX-IP730LPMVR-W9

GESS XTREME™

3 MP Network License Plate Capture Cameras

MAIN FEATURES

- 60FPS@2M / 30FPS@3M video output
- Less than 90km/h
- 1/2.8" SONY CMOS, No sawtooth when fast moving
- Dual stream support (Stream rate: 20Kb-10M, Default stream rate 4M)
- 9-22mm Auto IRIS Motorized Varifocal IR Lens, 42Pcs SMD LED, Available IR Distance:2-15m
- IP66 compliant
- ONVIF Profile S and Milestone Support, SDK available
- True Day/ Night Operation: IR Cut Filter (ICR)
- Storage: TF Card， NVR
- Power Supply: DC12V±10%,POE

RECOMMENDED USE

This product is ideal for:

- Applications that require the camera to be mounted lower than normal installation heights; such as mounting posts or guard gate entries.
- Shorter range distances.
- Commonly used in Outdoor Applications.

DIMENSIONS

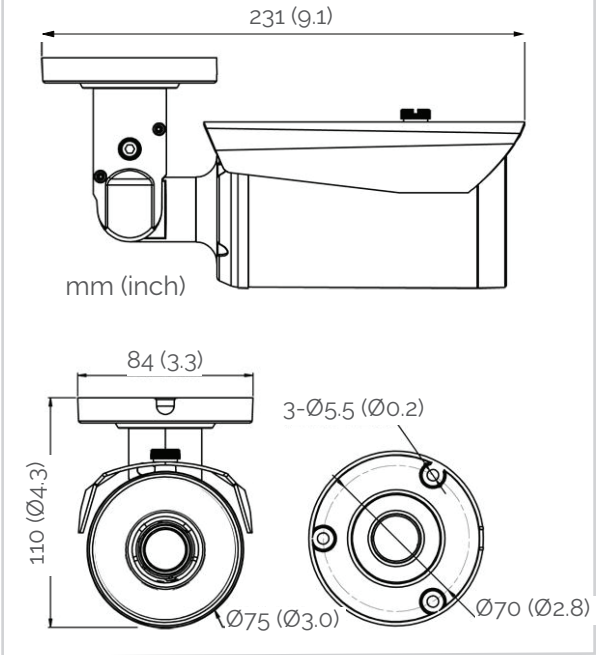

TECHNICAL SPECIFICATIONS

SKU #

GESSX-IP730LPMVR-W9

CAMERA

IP Rating	IP66
Filter	Removable IR Cut Filter
Image Sensor	Progressive Scan CMOS
Lens	9-22mm Motorized Varifocal IR Lens
Resolution	2048(H)×1536(V)
Electronic Shutter	1/1000s
Min Illumination	0Lux
Available IR Range	2～15M(6.56-49.2ft)

VIDEO/AUDIO

Video Compression	H.264/H.265
Transmission Stream Rate	Dual Stream (Code Rate:20Kb~10M, Default Code Rate:4M)
Frame Rate	Main Stream：1~25fps (PAL) ,1~30fps (NTSC) Sub Stream：1~25fps (PAL) ,1~30fps (NTSC)
Audio Compression	G711

EXTERNAL INTERFACE

Network Interface	RJ45*1 10M/100M
Remote Control Interface	/
Audio Interface	input/output*1
Alarm Interface	input/output*1

NETWORK

Protocol	TCP/IP, UDP, SMTP, PPPoE, DDNS, SNTP, DHCP, FTP, uPnP,RTSP,HTTPS,IPv6
Network Support	ONVIF Profile S, SDK, Milestone
Maximum Users	10
Web Language	English, Simplified Chinese, Traditional Chinese

FUNCTION

Storage	TF Card, NVR
Video Type	Manual, Timing, Motion Detection, Alarm Video
Alarm Triggers	Motion Detection, alarm
Alarm Event	Snapshot, Video, Alarm Output, Email Upload, PTZ Drive
System/Explorer Support	Windows XP, Windows 7, IE7.0 and above
General Function	Flashing, True WDR, DWDR 、3DNR, Mirror, Watermark Overlay、Camera angle

GENERAL

Power Supply	DC12V±10%,POE
Current Consumption	770mA(Max)
Dimension	231×84×110mm(9.1" ×3.3"×4.3")
Weight	820g (28.92oz.)
Storage Temperature	-30～+60℃
Operating Temperature	-30～+45℃

www.gess-inc.com info@gess-in.com

USA | PUERTO RICO | COLOMBIA

GESS® TECHNOLOGIES

All trademarks andr registered trademarks are the property of their respective owners. GESS Technologies is a registered trademark of Global Engineering Sevurity Systems